CONT - ASPHALT Ltd

THE "THB ®" CONTAINER FACT SHEET

1. Presentation of CONT-ASPHALT Ltd (the Company) and its product line, which was incorporated in the Seychelles Republic in 1983.

   Exhibit A

2. By 1989, CONT-ASPHALT Ltd had developed new technology for the heating, storage, transportation and delivery of bitumen using parallelepiped 20 feet container known as CATM.

3. The CATM technology was first patented 1993.

   Exhibit B

4. A brief description of our technology, especially our THB®, worldwide patented.

   Exhibit C

5. The bitumen is heated from the outside of the THB® container, as opposed to inside heating elements used by the competition.

   Exhibit D

6. More than 5'500'000 tons of bitumen have been transported and delivered using the CATM – THB® containers between 1983 and 2010 in Africa, the Carribean, Latin America and Middle East;

7. In 1996, the Company developed and patented a more advanced, cylindrical heated container technology for the transportation, storage and delivery of bitumen known as THB® (**T**ank **H**ot **B**itumen), allowing for transportation of liquid bitumen.

8. The THB® container technical specifications are shown in Exhibit E.

   Exhibit E

9. THB® patents and copyright and patent pending are shown in Exhibit F.

   Exhibit F

10. A comparison of features of the THB® container with competing products is shown on Exhibit G.

    Exhibit G

11. Tests performed by the Division of Roads and Transport Technology, in Pretoria, South Africa in 1997 demonstrate that the **bitumen organic and/ or mechanical properties were not altered while heated in the THB® container.**

    Results of the tests made <u>in January 2009 in Binzhou (China)</u> at the China National Offshore Oil Corp. (CNOOC) confirming the properties of the bitumen before and after the heating test made in the THB®.

    Exhibit H

12. Tests performed by Société des Pétrolles SHELL in 1998 on 35/50 and 100/40 bitumen **confirmed that the bitumen organic and / or mechanical properties were not altered while heated in the THB® container and that the THB® is energy efficient.** The tests revealed excessive heating time and certain safety and compliance issues.

    Exhibit I

13. The Company further improved the THB® technology to address the issues raised by the SHELL tests. See the "Historical THB® Recital of Facts"

    Exhibit J

14. The current version of the THB® containers was tested in South Africa in August of 2000 by TOSAS, an affiliate of SASOL and TOTAL; these tests demonstrate that **16 tons of grade 80/100 bitumen can be heated in 8 hours using 4,5 litres or 1.2 US gallons of fuel oil per ton of bitumen;**

    Exhibit K

15. A statement showing the Differences between THB® container and competing's heating storage tanks.

    Exhibit L

16. The THB® containers meet the latest international standards, including the Standard: American Society of Mechanical Engineers (ASTM) div. 1 of part VIII – ISO1493/3 Tank container – test specification).

17. A Summary of various advantages brought to the various users of bitumen

    Exhibit M

18. A charter giving the important saving in energy and greenhouses gas (CO2)

    Exhibit N

19. Two statements comparing the usual logistic transport and storage tanks of bitumen,and the logistic with the THB®

    Exhibit O

20 A charter showing the World Bitumen Demand. In the USA, since Pres. Bush sign in 2005 transport bill which will provide US$ 286.4 billions on roads and bridges, the demand for bitumen should be increasing in the future.

    Exhibit P

20. To date 187 THB® containers have been manufactured and sold by the Company.

21. Major licensees are, subject to certain subsequent acquisitions and corporate re organizations:

    a. ANGOBETUMES LDA, , a joint venture between SONANGOL and TRAFIGURA BEHEER BV (AMSTERDAM) , Branch Office Lucerne;

    b. Elf OIL AFRICA, domiciliated in England for AFRICA (from Tunis to Zaire) and CARRIBEAN;

    c. TOTAL OUTRE MER, PARIS for EAST AND SOUTHERN AFRICA;

    d. INDIAN OIL COMPANY, INDIA, under final negotiation;

    e. CNOOC (China National Offshore Oil Corp.) under negotiation.

    f. BALAMA PRIMA HOLDING Ltd, Hong Kong, under negotiation.

22. A list of major THB® clients is enclosed as Exhibit Q.

Exhibit Q

23. More than 8000 tons of bitumen have been transported and delivered using the THB® containers between August 2006 and January 2008 in ANGOLA.

24. CONT-ASPHALT LTD has extensive experience and expertise in the bitumen business. The article enclosed as Exhibit R, under the signature of Jack Grisoni, PhD and Chief Executive Officer of CONT-ASPHALT LTD., gives a summary of the key issues related to the use of bitumen.

Exhibit R

25. We did an Economic Study based on a Company which is renting the containers in USA, as it is the today tendency in this market.

Exhibit S

26. A Power Point summirizing the THB®'s technology.

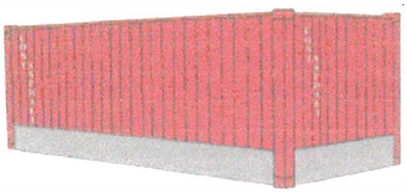

CONT - ASPHALT Ltd

PRESENTATION OF OUR COMPANY AND ITS PRODUCT LINE

"REDEFINING BITUMEN LOGISTICS AND HEATING"

CONT-ASPHALT Ltd specializes in the distribution of bitumen in heatable 20 feet containers, more particularly in the tropical areas of Africa, the Caribbean and Central America. Since 1983, we have delivered more than 5'500'000 tons of bitumen in our heatable containers CATM (a parallelepiped 20 feet container) and THB®.

In Western countries, and in some countries like USA, Canada, India, China, Far East, South Africa, the conditions are different to those in the tropics. For these conditions, from 1996, on demand of our customers / contractors, we have developed **a new tank container THB®**, (**T***ank* **H***ot* **B***itumen*) which is much improved, catering at one and the same time for **the quality of the bitumen**, the **transport regulations** (especially in the case of using railway transport - INTERMODAL), and the **new government environmental requirements.**

The **THB® container, worldwide patented,** in which we could easily move liquid bitumen products, is the **only one available into the market**, which is heating the bitumen from **OUTSIDE OF THE MASS OF THE PRODUCT**. Our technology is the **ONLY ONE AVAILABLE IN THE MARKET, WHICH DOES NOT INCUR ANY CHANGE OF STANDARDS OF THE BITUMEN, both mechanical and organical properties**.

In order to have a better and complete understanding of our system, we invite you to visit our Web Page under the following address www.cont-asphalt.com , clicking the English THB® chapter, you will have all technical details and results of tests made with our THB® by SHELL, TOTAL and CNOOC (China) when you will download, under the picture, the "THB® TECHNICAL BROCHURE".

The World Bitumen Demand is to-day about 100 millions of tons per year, and the growth for 2010 is estimated to be 10%. In this extended market, the interest for our technology is increasing due, on one hand to its technical advantages, the reduction of the greenhouses gas (CO_2) and to the economic saving for the transporters, the contactors on the other hand.

We already are present in our traditional African and Central American markets and, we actually are opening some new very attractive markets like the USA, Canada, Eastern Europe, Middle East, India, China, Australia, before to foresee some other Far East markets, and South America.

To be in a position to reach our future targets, we are looking for companies or contractors to whom we could grant license of our technology. Our partners could also be industrialists, financial partners for cooperation and also investors. In case of buyout of the company, grant of license, the undersigned is ready to stay at disposition for a certain period of time in order to forward his know-how, business relations.

THB® PICTURES AND DETAILS ON BURNERS ATTACHMENT

CONT-ASPHALT Ltd
The Creole Spirit
Quincy Street
P.O. Box 18
Victoria / Mahé
Seychelles

PATENT GRANTED FOR "CATM" CONTAINER

Country	Number	Title	Status
South Africa	93/4622	"Container"	Granted on Febr. 23, 1994
South Africa	94/3735	"Container"	Granted on March 29, 1995
OAPI	9837	"Container"	Granted on Jan. 19,1994
OAPI	9942	"Container"	Granted on Nov. 15, 1994

OAPI is coverring:

Benin
Burkina Faso
Cameroon
Central African Republic
Congo
Gabon
Guinea
Ivory Coast
Mali
Mauritania
Noger
Senegal
Tchad
Togo

March 2007

CONT - ASPHALT Ltd

Route des Monts 410 - 1090 LA CROIX (LUTRY), Switzerland
Tel 41 21 793 14 21 **Fax** 41 21 793 14 24 **E-Mail**: cal@iprolink.ch

REDEFINING BITUMEN LOGISTIC AND HEATING

Tank Hot Bitumen® " THB ® " CONTAINER PATENTED WORLDWIDE

CONT-ASPHALT Ltd specializing in the distribution of bitumen in heatable 20 feet containers, more particularly in the tropical areas of Africa, the Caribbean and Central America. Since 1983, we have delivered more than 5'500'000 tons of bitumen in our heatable containers CATM and THB®.

In Western countries like Europe, in USA, Canada, and some other countries, like India, China, Far East, South Africa, and the conditions are different. For these conditions, we have developed **a new THB® container**, which is much improved, catering at one and the same time for **the quality of the bitumen, transport regulations** (especially in the case of using railway transport), and **new government environmental requirements.**

Our new modern **THB®** distribution technology, patented worldwide, is perfectly adapted to these new markets, at a much-enhanced cost effectiveness to the end-user:

- **Owing to the heating system, which is outside of the mass of the product, using two burners, bitumen does not incur any change in standard, with regard to both mechanical and organical properties.**
- **The unique heating system avoids loss of product.**
- **The capacity of our container – 20 feet container - 23'000 litres – has better over-all and weight constraints than traditional road tankers.**
- **Our system allows the end-user to heat a large quantity of bitumen in a very short period of time at a cheaper cost.**
- **Our THB® can be moved as an INTERMODAL transport network.**

Due to the very competitive conditions prevailing in road construction, contractors are not prepared to invest in expensive road tankers that may be unutilised for long periods between two contracts or during the low season. The investment in a road tanker is more important that for the THB® containers. According to our experience, with the same investment for a road tank, for a payload of 28 tons of bitumen, we can have 8 THB®, for which we have a payload of the equivalent to 160 tons. The **THB® container** solution is much more cost effective.

In addition, our **THB®** can be used for holding buffer stock on site, which is not practical with a road tanker. The **THB®**, being **a smelter in itself**, as well as **a storage facility**, is a more flexible network **avoiding investment in such equipment**.
Furthermore, the heating cost of the product is substantially lower using our THB® compared to a road tanker. Indeed, **4,9 litres of gas oil/T** in 9 hours are needed to heat the product, whilst for a storage tank, the consumption is approximately 20 litres of gas oil/T. The cost of saving for the contractor is quite considerable.

For technical information, please visit our Web site : www.cont-asphalt.com and click under the THB® picture.

SCHEMATIC VIEW IN CUP OF THE CONTAINER THB®

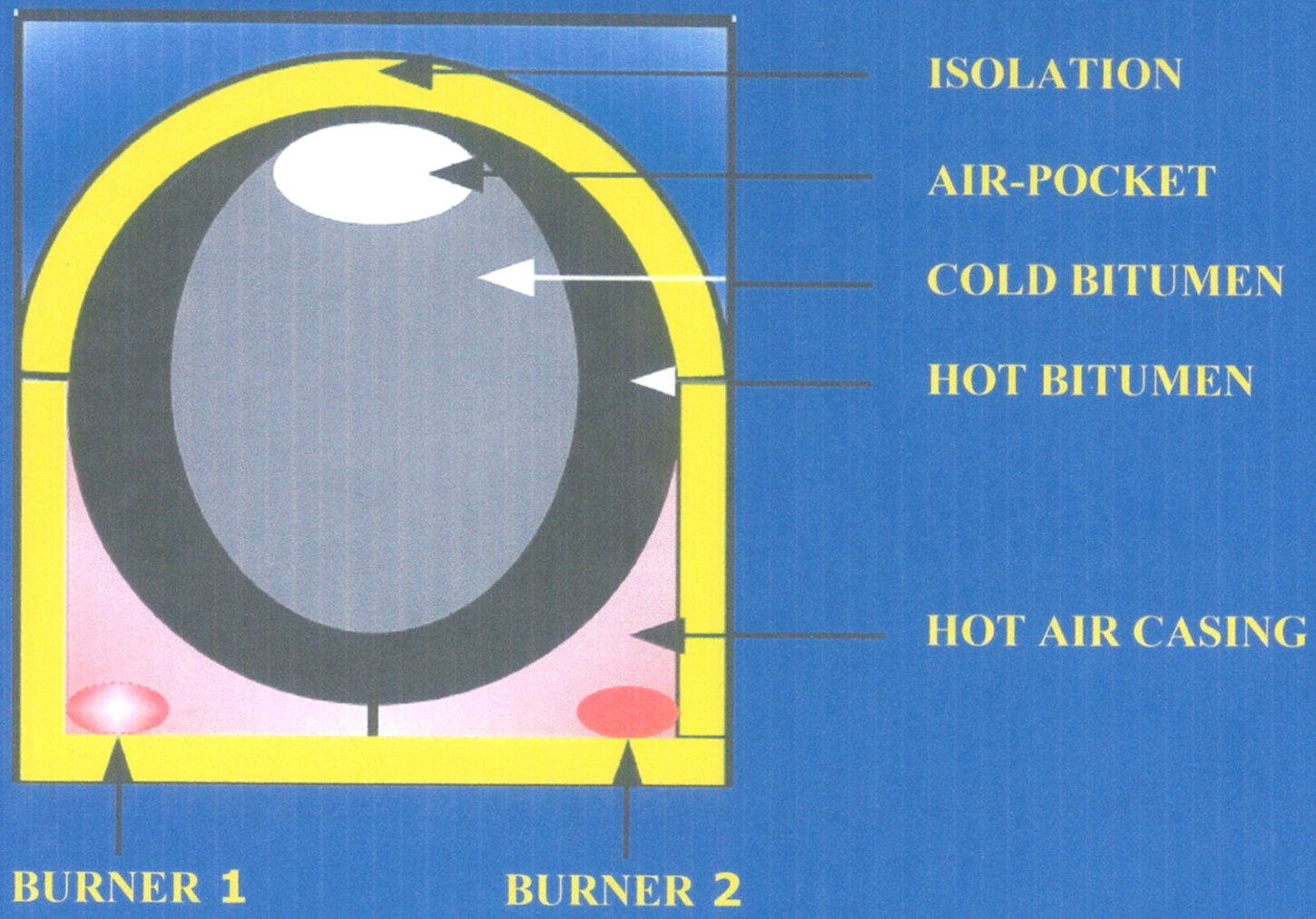

HEATING CONCEPT OF THE CONTAINERS (1)

STAGE 1

At ambient temperature

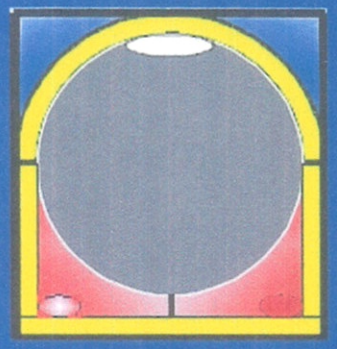

Due to the density difference (about 10%) between the hot and the cold bitumen, we have an empty space.

Double bottom for the heating supply.

STAGE 2

Beginning of The Heating Process

At the beginning of the heating process, the bitumen is softening at the top of the double bottom, as well along the walls of the container.

Therefore, the exchange surface of calories is very large. Bitumen getting soft on heating surface and walls: 15 m².

Heating source.

HEATING CONCEPT OF THE CONTAINERS (2)

STAGE 3

During the heating process.

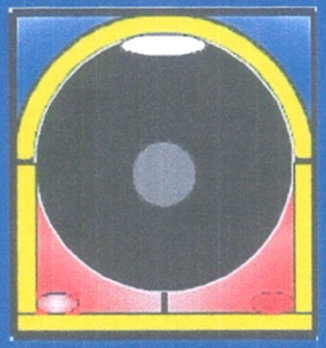

Liquid bitumen going up by Convection.

As the bitumen has a different density in cold and hot stage, by convection, the bitumen in liquid stage is going up, and the corn (cold bitumen) is going down.

STAGE 4

Ready to use.

After around 8 hours, all the bitumen is liquid, at 130° C, without having changed its initial standard properties.

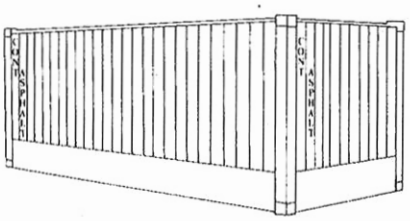

CONT ~ ASPHALT Ltd

Route des Monts 410 - 1090 LA CROIX (LUTRY) Switzerland
Tel 41 21 793 14 21 **Fax** 41 21 793 14 24 **E-Mail**: cal@iprolink.ch

THB ® "T*ank* H*ot* B*itumen* UN T1 Container : SPECIFICATIONS

The "THB®" is an ISO UN registered, maritime 20 ft container, filly framed with corner twist locks.

- Dimensions : 6058 x 2438 x 2591 mm or 20' x 8' x 8'6" feet
- Capacity : 23'000 litres (equivalent to 22'430 litres bitumen at 25° C)
- Gross weight : 27000 kg
- Maximum payload : 20'000 kg
- Tare weight : 7'000 kg (estimated)
- Stacking : 86'400 kg/POST
- Shell Material : Q345D GB/T1591-94
- Head Material : Q345D GB/T1591-94
- Manufacture Code : ASME VIII div. 1
- Join efficiency : Shell & Head 0,85 to 1
- Test Pressure : 2,65 BAR/cm²
- Max. Working Pressure : 1,75 BAR/cm²
- Pressure Relief valve : 1 valve 2,5 ", set at 2,12 Bar
- Air/nitrogen valve : 1 inlet of 1½"
- Discharge valve : 1 valve, 3.0"
- Insulation : 50 mm Rock Wool
- Insulation Cover : 1,2 mm aluminium Sheet pickling of stainless steel parts
- Working temperature : 20° C to 200° C
- Painting : primer and finishing, warranty 3 years
- Accessories : - Manhole Cover
  - Ladder and Walkways
  - 2 Thermometers (middle–bottom of the tank)
  - Removable high performance burners (RIELLO - Italy), using gas oil or kerosene, and possibly gas.
- Heating System : in a double bottom, **outside of the mass of the product**, using 2 burners. Bitumen **does not incur any change in standard**, with regard to the chemical, mechanical and organic properties. There is no loss of product. the double bottom is protected from the temperature of the flame with high fire resistance steel tube.
- CLASSIFICATION : American Bureau Shipping ABS
- TYPES APPROVALS : UN portable tank (IMDG, ADR/DIR), UIC, TIR, CSC, US DOT and transport Canada

REPUBLIC OF SOUTH AFRICA
PATENT ACT, 1978

CERTIFICATE

In accordance with section 44 (1) of the Patents Act, No. 57 of 1978, it is hereby certified that CONT-ASPHALT LIMITED has been granted a patent in respect of an invention described and claimed in the complete specification deposited at the Patent Office under the number 2000/4255. A copy of the complete specification is annexed, together with the relevant Form P2.

In testimony thereof, the seal of the Patent Office has been affixed at Pretoria with effect from the 25 day of April 2001

Registrar of Patents

G.P.-S. 019-9055

The United States of America

The Commissioner of Patents and Trademarks

Has received an application for a patent for a new and useful invention. The title and description of the invention are enclosed. The requirements of law have been complied with, and it has been determined that a patent on the invention shall be granted under the law.

Therefore, this

United States Patent

Grants to the person(s) having title to this patent the right to exclude others from making, using, offering for sale, or selling the invention throughout the United States of America or importing the invention into the United States of America for the term set forth below, subject to the payment of maintenance fees as provided by law.

If this application was filed prior to June 8, 1995, the term of this patent is the longer of seventeen years from the date of grant of this patent or twenty years from the earliest effective U.S. filing date of the application, subject to any statutory extension.

If this application was filed on or after June 8, 1995, the term of this patent is twenty years from the U.S. filing date, subject to any statutory extension. If the application contains a specific reference to an earlier filed application or applications under 35 U.S.C. 120, 121 or 365(c), the term of the patent is twenty years from the date on which the earliest application was filed, subject to any statutory extension.

Acting Commissioner of Patents and Trademarks

Attest

US005909730A

United States Patent [19]

Lehmann et al.

[11] **Patent Number: 5,909,730**

[45] **Date of Patent: Jun. 8, 1999**

[54] **BITUMEN CONTAINER**

[75] Inventors: **Peter Lehmann**, Wadeville, South Africa; **Jacques Grisoni**, La Croix-sur-Lutry, Switzerland

[73] Assignees: **Henred-Fruehauf Trailers (Proprietary) Limited**, South Africa; **Cont-Asphalt Limited**, Seychelles, Switzerland

[21] Appl. No.: **08/822,429**

[22] Filed: **Mar. 21, 1997**

[51] **Int. Cl.**[6] **F24H 9/00**

[52] **U.S. Cl.** ..... **126/343.5 A**; 126/373

[58] **Field of Search** ..... 126/343.5 A, 343.5 R, 126/369, 369.1, 350 R, 271.1, 373–376

[56] **References Cited**

U.S. PATENT DOCUMENTS

1,962,657	6/1934	Hendricks	126/343.5 A
3,503,381	3/1970	Role	126/343.5 A
3,633,563	1/1972	Osborn	126/343.5 A
4,028,527	6/1977	Thagard, Jr.	126/343.5 A

FOREIGN PATENT DOCUMENTS

2137116	7/1973	Germany	126/343.5 A
762796	12/1956	United Kingdom	126/343.5 A

Primary Examiner—James C. Yeung
Attorney, Agent, or Firm—McDonnell Boehnen Hulbert & Berghoff

[57] **ABSTRACT**

THE INVENTION provides a beatable container for bitumen, cut-back or the like, comprising a body member defining a base zone, side wall zones, end wall zone and a roof zone, characterized in means for transmitting heat from a heating medium to the base zone and to at least part of the side wall zones of the container.

6 Claims, 6 Drawing Sheets

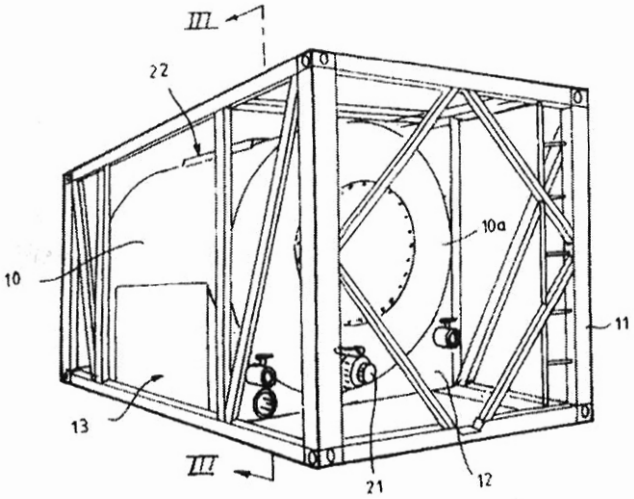

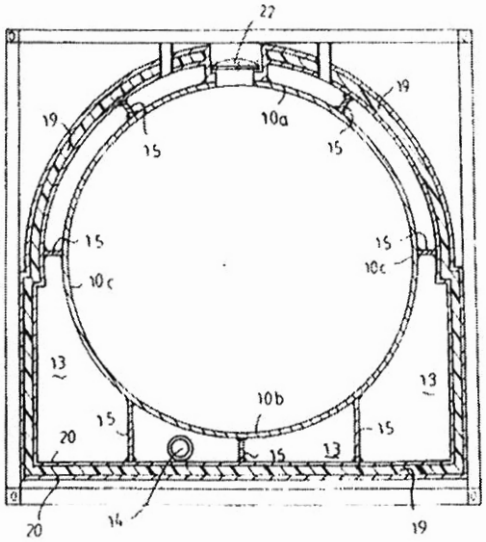

实用新型专利证书

Certificate of Utility Model Patent

中华人民共和国国家知识产权局

STATE INTELLECTUAL PROPERTY OFFICE OF THE PEOPLE'S REPUBLIC OF CHINA

CONT-ASPHALT Ltd
The Creole Spirit
Quincy Street
P.O. Box 18
Victoria / Mahé - Seychelles

PATENT GRANTED FOR "THB" CONTAINER

Country	Number	Title	Status
South Africa	97/2487	"Bitumen Container"	Granted on Febr. 15, 1997
South Africa	2000/4255	"Heatable Bitumen Cont."	Granted on April 25, 2001
South Africa	2005/05625	"Heatable Container"	Granted on April 26, 2006
OAPI	PV 60983	"Bitumen Container"	Granted Oct. 11, 2002
USA	5,909,730	"Bitumen Container"	Granted on June 8, 1999
Canada	2,200,944	"Bitumen Container"	Granted March 25, 2000
EUROPE	97301927.6	"Bitumen Container"	Granted on Nov. 21, 2002
Antiqua	P/97/75879	"Bitumen Container"	Grantedon March 31, 2004
Aripo	AP962	"Bitumen Container"	Granted March 6, 2001
Cuba	22646	"Bitumen Container"	Granted on May 2, 2000
Haiti	240/Reg 5	"Bitumen Container"	Granted on July 13, 2001
Jamaica	18.01.3846	"Bitumen Container"	Granted on Nov. 10, 2003
Tanganyika	TZ/P/97/00007/97	"Bitumen Container"	Granted on April 28, 2003
Ethiopia	ET/P/98/00002	"Bitumen Container"	Granted on Febr. 1, 2001
INDIA	29.06.2452	"Heatable Bitumen Cont.	Granted on December 1, 2006
USA	11/398,988	"Heatable Container	Granted on December 23, 2008
China	ZL200820001250.7	"Patent for Utility Model	Granted on March 04, 2009

OAPI is coverring:
- Benin
- Burkina Faso
- Cameroon
- Central African Republic
- Congo
- Gabon
- Guinea
- Ivory Coast
- Mali
- Mauritania
- Noger
- Senegal
- Tchad
- Togo

ARIPO is coverring:
- Gambia
- Ghana
- Kenya
- Lesotho
- Malawi
- Sudan
- Swaziland
- Sierra Leone
- Tanzania
- Uganda
- Zimbabwe

MIDDLE EAST :
- GCC
- UAE
- OMAN
- YEMEN
- SAUDI ARABIA
- KUWAIT
- QATAR

CHINA

HONG KONG

01.10.2010

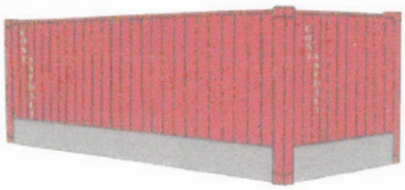

CONT - ASPHALT Ltd

Comparison of THB Container vs. other type of Bitumen containers

Description	THB Container	Normal Bitumen container
Heating System	Outside of container.	Heating pipe immersed in the product
Heating surface area	Large heating surface area hence uniform heating of product alround No deformation of Bitumen	Very small heating area, causes local concentrated heating and danger of coke formation.
Melting time of total volume of bitumen	Less than 8 hours	About 16 - 20 hours
Fuel (diesel) consumption	About 4 liters/ton of bitumen	About 20 liters/ton of bitumen
Design Code	ASME Sec. VIII, Div. 1	Not designed as per internationally knowen code
Use for different types of Petroleum Products	Yes	No
Safe operation	Very safe to handle any Petroleum Products	Design only to handle Bitumen May be unsafe to handle other petroleum products
Safety Arrangement	Fitted with Temperature Gauge, Pressure Gauge, Safety Valves and Rupture Disc with manometer etc	No Temperature & pressure gauges No safety valve & rupture disc
Structural support	Container is complete with external structural supports and can be readily used for road or sea transport	Container only consists of cylindrical vessel and no external structural support in included and will require additional investment

March 2007

Division of Roads and Transport Technology
PO Box 395 Pretoria 0001 South Africa
Telephone (012) 841-2911
International + 27 12 841-2911
Telephase (012) 841-3232
Telex 3-21312 SA
Teletex 350180=CSIR

Roads and Transport Technology — Pad- en Vervoertegnologie

CSIR — WNNR

Our ref. AH1126 -6 - 97
You ref. Heating of container test - 23/05/97
Order no. THB 8.001 RSA/Account to Cont-asphalt

TO: Dr. J. Grisoni, CONT - ASPHALT (Mr. E. Angelica, Henred Fruehauf)
P.O. Box 7,
1602 La Croix-sur-Lutry
SWITZERLAND.

Tel. No. 09 4121 793 1421
Fax. No. 09 4121 793 1424

FROM: Mrs E van Assen
FAX No. (012) 841-2690
TEL No. (012) 841-2295
Fax date 10 July 1997

Page(s) 2

Dear Sir

TESTS ON HEATED BITUMEN (HENRED FRUEHAUF TRAILERS)

The sample of 60/70 penetration grade bitumen taken after the HEATING TEST of 16/05/97 has reference.

The test results are given in Table 1. The bitumen sample complies with the requirements of SABS 307, amendment 5. The results obtained on the original bitumen as taken from the Natref laboratory certificate of quality, are also shown in Table 1.

Please contact me if you require additional tests or information on these results

Yours sincerely

Table 1 : Properties of 60/70 penetration grade bitumen (after heating of container test)

Sample description Property	Original Natref 12/64/306/ 100	After heating L1907	Test method	Requirements SABS 307 **Amendt-5**
Dynamic viscosity 60 °C, Pas 135 °C, Pas	 188.0 0.37	 188.0 0.37	 ASTM D4402	 120 - 250 0.22 - 0.45
Penetration, 25 °C, mm^{-1}	57	61	ASTM D5	60 - 70
Softening point, R&B, °C	48.0	49.5	ASTM D36	46 - 56
Ductility, 15 °C, cm	>100	>100	DIN 52013	>100
Spot test, % Xylene	25	25	AASHO T102	30 max
After RTFOT				
Mass change, % (m/m)	+ 0 .0 5	+ 0.05	ASTM D2872	0.5 max
Viscosity, 60 °C, Pas % Original	- 208	414 220	ASTM D4402	 300 max
Ductility, 15 °C, cm	80	81	DIN 52013	10 min
Softening pt. (R & B) , °C Increase, °C	54.0 6	55.5 6	ASTM D36	48 min 9 max
Penetration, % Original	62	70	ASTM D5	60 min

REPORT ON THE TESTING OF ASPHALT HEATER IN THE THB®

CHINA UNIVERSITY OF PETROLEUM

REPORT ON THE TESTING OF ASPHALT HEATER IN THE THB®

On October 14, 2008, a contract was signed between CHINA UNIVERSITY OF PETROLEUM, registered in Qingdao Economic Develop Zone, Shandong Province (China), and CONT-ASPHALT Ltd registered company in Seychelles, represented by Dr. Jacques Grisoni, from La Croix-sur-Lutry (Switzerland) to conduct a heating test of bitumen using a heatable container of CONT-ASPHALT type THB®.

Both sides agree to mutually execute the THB® TESTS WITH China Offshore Bitumen CO. Ltd. (Shandong Binzhou) that belongs to afore mentioned company.

The test was conducted January 8, 2009, by the following references :

Place of trial	China Offshore Bitumen CO. Ltd
Supply of the bitumen	CNOOC
Grade of bitumen	60/80
Date of loading the bitumen into the THB®	25 December 2008
THB® number	THBU 000102-5
Quantity of bitumen loaded into the THB®	19,2 Tons
Temperature of the bitumen on the loading	+ 145° C
Number of days for cooling	10 days
Outside temperature at the beginning of the test	- 7° C
Outside temperature at the end of the test	- 2° C
Starting time of the test	11H00
Time at the end of the test	19H30
Duration of the test	8 ½ hours
Temperature of the bitumen at the beginning of the test	+ 35° C (bottom of THB®) / + 50° C (middle of THB®)
Temperature of the bitumen at the end of the test	+ 135° C " + 120 C "
Type of burner (2 burners)	RIELLO G-5 , nozzle 1.25 gal.
Total fuel consumption for the test	72.5 litres
Fuel consumption per tonne of bitumen	3.72 litres / ton
Analysis of properties of bitumen	before the test / after the test : see attached CNOOC refinery's reports

Conclusions:

The demonstration started at 11:00 in the morning and the temperature at the middle of the THB® read 50° C and at 35° C at the bottom.

The heat was applied to the THB® container by 2 burners RIELLO, type G-5.

One can conclude that under the above mentioned conditions the CONT-ASPHALT THB® container, containing 19.2 tons of bitumen, 60/80 penetration grade, the temperature of the product could raised from 35° C to 120° C in a period of 8 ½ hours

Furthermore, according to the analysis, the bitumen hasn't been incurred during the heating test.

Signature:

Professor, China University of Petroleum, P.R. of China

Attached : 2 analysis reports

中海沥青股份有限公司

China Offshore Bitumen CO. Ltd

中海油 36-1 重交通道路沥青

CNOOC 36-1 bitumen for heavy traffic pavement

质量检验结果报告单

Quality of the test results report

型号 Type	级别 Grade	取样地点 Sampling palace	取样时间 Sample time	采用标准 Method
70#	A	东 1#罐 East 1# tank	2008.12.25 23：00	TTGF40

检验内容 Test Content

检验项目 Item	指标 Standard				检验结果 Test results	单项判定 Qualification
	AH-90		AH-70			
软化点 Soft Point ℃≥	A	45	A	46	46.5	合格 Qualified
	B	43	B	44		
针入度 Penetration (25℃) 0.1mm	83-90		65-75		72	合格 Qualified
延度 Ductility (15℃) cm≥	100		100		＞150	合格 Qualified
检验结论 Test Conclusion	合格 Qualified				2008 年 12 月 25 日	
备注 Notes						

检验员 Tester：黄云霞　　审核 Reviewers：房新光

中海沥青股份有限公司

China Offshore Bitumen CO. Ltd

中海油 36-1 重交通道路沥青

CNOOC 36-1 Bitumen For Heavy Traffic Pavement

质量检验结果报告单

Quality Of The Test Results Report

型号 Type	级别 Grade	取样地点 Sampling palace	取样时间 Sampling time	采用标准 Method
70#	A	润滑油罐 Lubricating Oil tank	2009.1.9, 19：00	TTGF40

检验内容 Test Content

检验项目 Item	指标 Standard				检验结果 Test results	单项判定 Qualification
	AH-90		AH-70			
软化点 Soft Point ℃≥	A	45	A	46	47.0	合格 Qualified
	B	43	B	44		
针入度 Penetration (25℃) 0.1mm	83-90		65-75		73	合格 Qualified
延度 Ductility (15℃) cm≥	100		100		＞150	合格 Qualified
薄膜烘箱后 Thin film oven test						
针入度比 Ratio of penetration ≥				61	68	合格 Qualified
质量变化 Mass loss ≤				±0.8	-0.06	合格 Qualified
延度 Ductility (10℃) ≥				6	9	合格 Qualified
检验结论 Test Conclusion	合格 Qualified				2009 年 1 月 9 日	
备注 notes						

检验员 tester：黄云霞　　审核 Reviewers：房新光

S.P.B 13160 CHATEAURENARD
Le 24/11/98

ENGLISH TRANSLATION IN BLUE

ESSAIS CONTAINER
CONTAINER TESTS

	35/50		100/40		REMARQUES
TONS LOADED TEMPERATURE AT LOADING Chargement en tonnes Température °c (chargement)	17,72 155		16,40 212		
BITUMEN CHARACTERISTICKS WHEN LOADING Caractéristiques du bitume au chargement	TBA 51	PENE 39	TBA 96	PENE 39	**THE PRODUCT DOESN'T CHANGE EVEN AFTER LONG HEATING** *Le produit n'évolue pas malgré un réchauffage prolongé*
CHARACTERISTICKS OF BITUMEN ON OFFLOADING AFTER HEATING Caractéristiques du bitume au dépotage après réchauffage	51,5	35	95	40	
Moyennes des températures AVERAGE TEMPERATURE DURING THE TEST pendant l'essai - diurnes DAY - nocturnes NIGHT	34 24		25 17		
Temps de refroidissemnet COOLING DURATION	de 155 à 48 °c 22 jours DAYS		de 212 à 46°c 30 jours DAYS de 212 à 32°c 42 jours		
Temps de réchauffage HEATING DURATION	de 50 à 164°c 65 jours DAYS		*80 heures HOURS		** réchauffage discontinu. Arrêt de la chauffe à 220°c pour raison sécurité*
Consommation fuel O.D. 2 Brûleurs RIELLO FUEL CONSUMPTION FOR 2 RIELLO BURNERS	160 Kg		426 Kg EFFICIENCY OF THE BURNERS test rendement brûleur VERY GOOD en annexe : très bon		*** HEATING DISCONTINUED AT 220 C DUE TO SAFETY REASONS**

date	*2907	*3007	*3107	*0108	*0208	*0308	*0408	*0508	*0608	*0708	*0808	*0908	*1008	*1108	*1208	*1308	*1408	*1508	*1608	*1708	*1808	*1908	*2008
TEMP °C	155	143	133	123	113	107	99	92	85	81	75	72	70	67	63	60	59	59	54	51	50	48	

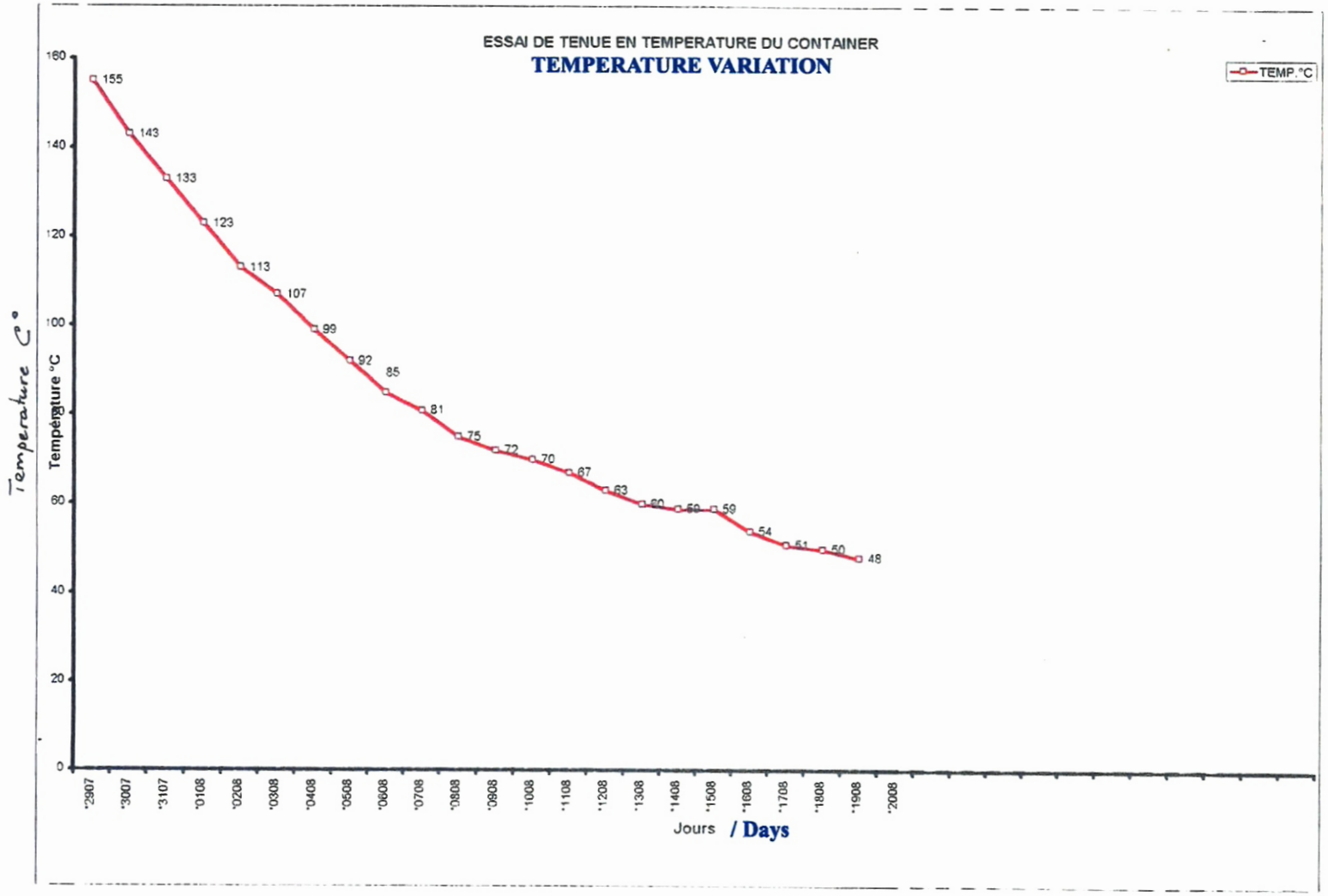

prepared by Shell - France

Préparé par Shell 19/08/98

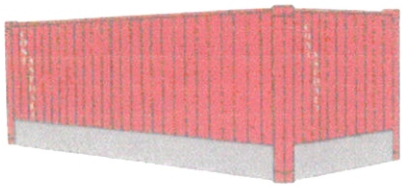

CONT - ASPHALT Ltd

HISTORICAL "THB ®" CONTAINER RECITAL OF THE FACTS

1. CONT-APHALT Ltd has developed a new heatable technology for the distribution of bitumen in the year 1989 using parallelepiped 20 feet container, and successfully obtained a first patent in 1993 and is known as **CATM**.

2. Following the successful development of the CATM, and on persistent request of our customers, we have developed the **THB®** (Tank Hot Bitumen) container in the year 1996, in which we could easily move liquid bitumen products, still maintaining our superior heating technology, **which heats the bitumen from outside of the mass of the product**.

3. During various laboratory tests conducted in 1997 (please refer to the tests done by Division of Roads and Transport Technology, Pretoria, South Africa – pages 15-16), results successfully proved that by using our superior heating technology, **Bitumen did not change either its organical or mechanical properties at all during the heating time**. However, we did some additional modifications in the system to make heating still a little easier and to reduce the heating time, since the construction's concept was into a frame 20 feet container and we had to heat the Bitumen from full length of the tank.

4. Subsequently, we undertook some more tests, in SHELL 's plant in France. SHELL used 2 different grades of bitumen – 35/50 and 100/40 and **they confirmed that the Bitumen did not change its properties**, but we still had, due to the fact that the bitumen is a bad heat transmitter product, a very long heating time. Please refer to their report (page 11). Accordingly, we modified, developed and evolved a new construction concept of the tank, patented worldwide, and named it as **THB**, wherein we totally eliminated this inconvenience, and of course, **without changing our heating technology**.

5. Subsequently, ever since 1999, after having introduced a heating adaptation in the middle of the THB, the offloading has been without any problem.

6. Finally, in August 2000, during some tests made in South Africa at TOSAS, an affiliate of SASOL and TOTAL, **we fully achieved and obtained the heating of 16 tons of bitumen, grade 80/100, within 8 hours, reducing the heating consumption of the gas oil to 4,5 litres per ton of bitumen**. Please refer to the TOSAS report (page 17 to 20),

COOLING-DOWN CURVE

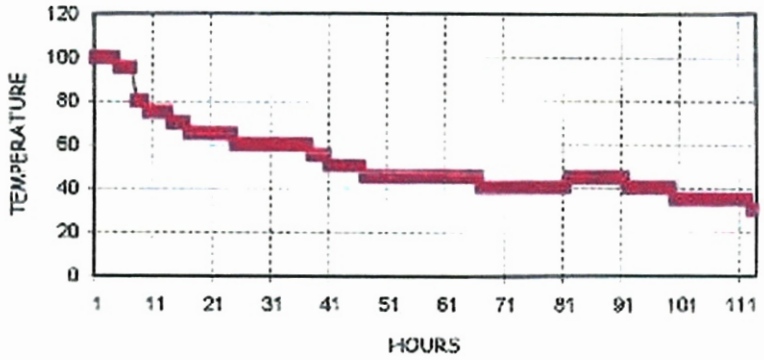

The demonstration started at 10:15 that morning and the temperature at the centre thermometer read 30°C. Heat was applied to the container by two Lamborgini burners and initially temperatures were not recorded, but after six hours the temperatures were read and they were as follows :

DATE	TIME	BOTTOM	CENTRE	SIDE
30.05.2000	16h20	105°C	130°C	100°C
	17h20	115°C	130°C	116°C
	18h20	130°C	130°C	128°C

One can conclude that under the above-defined conditions the Grisoni bitumen container containing 16 tons of 80/100 penetration grade bitumen, the temperature of the product could be raised from 30°C to 130°C in a period of 8 hours.

Regards

DENZIL SADLER
Technical Manager

Differences between the THB® container and competing heating storage tanks

Traditional horizontal and vertical tanks, such as tanks manufactured by HEATEC in the US, and used to store and heat up bitumen and other products are equipped with agitators to achieve homogeneity of blended products. Agitators are required because of the use of heating elements located "inside of the mass of the product", and because of the relatively small heat exchange surfaces at the bottom and on the vertical side of the tank. The traditional tank design does not allow for the bitumen natural convection movement, hence the need for agitators. The vertical position of heating elements in vertical tanks makes the matter even worse.

Figures 13, 14, 15 and 16, taken from HEATEC sales literature, illustrate this point.

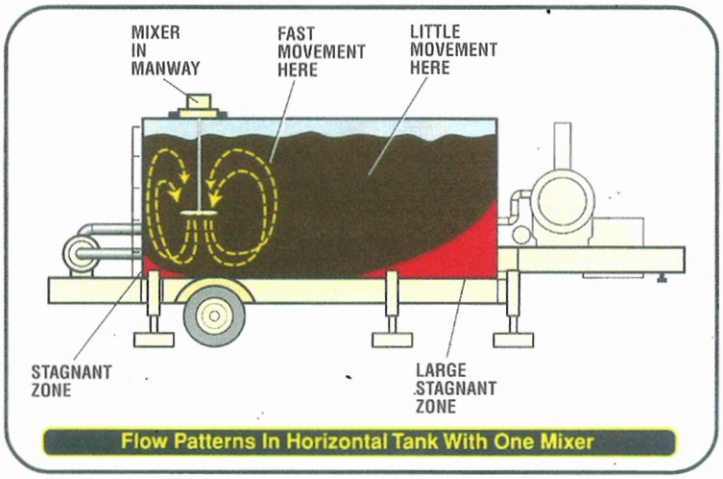

Figure 13

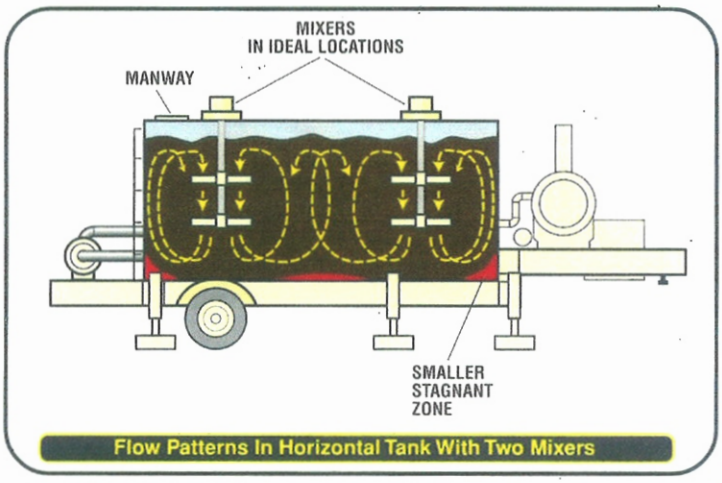

Figure 14

The flow patterns of a horizontal tank with one mixer in a manhole is illustrated in **Figure 13.** One drawback of inserting mixers through manholes is that the mixing blades have to be short enough to go through the opening. Thus, they cannot provide as much agitation as longer blades. Another drawback is the location of the manholes. They are usually located near the tank ends. These are not locations that will enable the mixers to produce uniform flow throughout the entire length of the tank. Some stagnant zones are unavoidable.

The flow patterns of a horizontal tank with two factory-installed mixers is illustrated in **Figure 14.** In this case the mixers are not in manholes, but are located to provide better flow patterns. They also have longer mixing blades. As might be expected, two mixers leave smaller stagnant zones than one, especially when the mixers are installed at optimum locations. It appears that two mixers at optimum locations give slightly better results than a spray bar. The long range effects of mixers in horizontal tanks are not known at the present time.

Vertical tanks have proved to make better mixing vessels than horizontal tanks mainly because of flow patterns. The flow patterns for a well-designed vertical mixing tank is illustrated in **Figure 15.** Its flow patterns appear to have very minimal stagnation zones. It has impellers that drive the liquid to the bottom of the tank and allow it to circulate upwards and around baffles on its sidewalls. Heatec and CEI have produced a number of tanks using this design. They have proved to work very well.

Vertical tanks also have other advantages. The area of the liquid that is exposed to air within the tank is far smaller than in a horizontal tank. Thus, the potential for oxidation is far less. It is a well known fact that oxidation occurs at a much higher rate as temperatures are

Figure 15

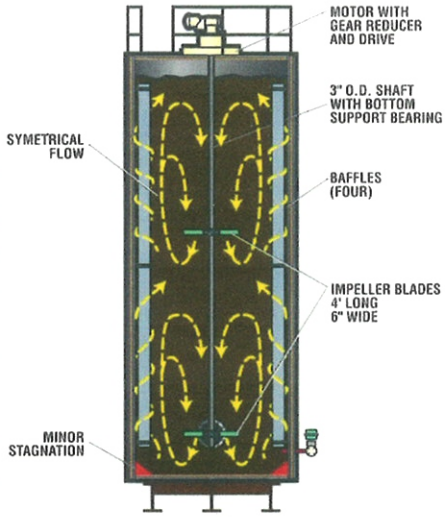

Flow Patterns In Vertical Tank With Impellers And Baffles

Figure16

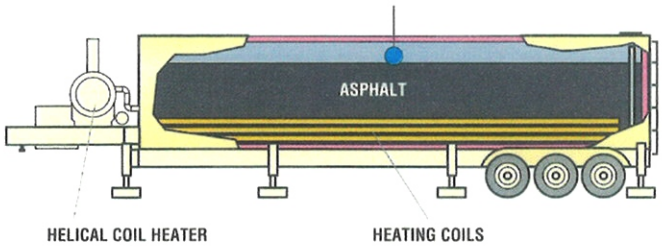

177°C (350°F) APPROX SURFACE TEMPERATURE OF COILS

Temperatures Of Heating Surfaces In Tank Heated By Hot Oil Heater

increased. Yet, PMACs must be maintained at higher temperatures to keep its components from separating. Thus, controlling oxidation is more important with PMACs than with virgin ACs used at lower temperatures.

Another advantage of the vertical tank is the land area it occupies. Vertical tanks require far fewer square feet of land than horizontal tanks.

Temperatures of heating surfaces

Most PMACs have a maximum film temperature of about 204 degrees C (400 degrees F). Thus, the material should not contact surfaces hotter than that. That does not present a problem for tanks heated with hot oil, but it does for direct-fired storage tanks.

Tanks heated with hot oil have serpentine heating coils in their bottoms (**Figure 16**). Hot oil circulates through the coils. The outer surfaces of these coils heat the

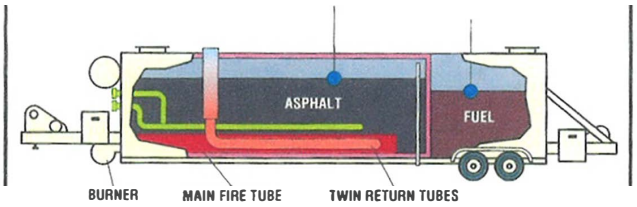

Figure 17

316 TO 482°C (600 TO 900°F)
APPROX SURFACE TEMPERATURE OF FIRE TUBES

Temperatures Of Heating Surfaces In Direct-Fired Tank

PMAC, which is in direct contact with the coils. The temperature of these surfaces never exceed the temperature of the hot oil circulating in them.

In a direct-fired tank one end has a burner that fires directly into a fire tube that extends well into the tank and doubles back (Figure 17). The outer surfaces of the fire tube heat the PMAC, which is in direct contact with these surfaces. The temperature of these surfaces range from 316 to 482 degrees C (600 to 900 degrees F). Thus, some of the PMAC comes into contact with these super-heated surfaces even though its overall or average temperature is maintained much lower. So direct-fired tanks will expose PMACs to temperatures that exceed the maximum allowable film temperature and will rapidly degrade the material. Consequently, direct-fired asphalt tanks are not recommended for use with PMACs. However, if one must be used despite recommendations, it is essential to equip it with a high-circulation system, such as a spray bar or mixers.

Delivery of PMACs to drum mixer or pugmill

The mixing and storage system is not the only consideration. It will probably be necessary to modify the pump and piping that delivers the liquid AC to the asphalt drum mixer or pugmill. Because PMACs are more viscous than virgin ACs they need larger pump motors and piping to maintain the same rate of flow as virgin ACs. Moreover, the pump should be located as close as possible to the PMAC storage tank to help maintain adequate pressure at the inlet port of the pump.

Choosing the equipment

Contractors who want to begin using PMACs with existing HMA facilities have to choose between adding new tanks or modifying old ones. Modifying old tanks might be more economical. But if it is done during a busy season, any plant downtime could easily lose that advantage.

Adding new vertical mixing tanks is probably the best solution for contractors doing high volumes of PMAC. One may cost more than modifying an old tank, but it is apt to be more troublefree. Vertical tanks are preferred over horizontal ones because they work better for mixing and have other advantages.

Contractors with a portable asphalt plant that is frequently moved face a somewhat more difficult decision, especially if their plant uses a direct-fired asphalt tank. As

CONT-ASPHALT's patented technology relies on a **very large heating surface located outside of the mass, all around the THB® tank,** from the bottom up to the top. As a result, the product inside the tank circulates by natural convection caused by the bitumen density differential resulting from differences in temperature. THB® containers are not direct-fired and do not expose the product to temperatures exceeding the maximum allowable film temperature that rapidly degrade the material.

In addition, the THB® patented technology, due again to its very large heat exchange surfaces dramatically cuts heating costs.

The THB® containers achieve a better result than traditional tanks equipped with agitators in terms of product homogeneity, absence of product degradation and fuel efficiency.

US005909730A

United States Patent [19]

Lehmann et al.

[11] Patent Number: 5,909,730

[45] Date of Patent: Jun. 8, 1999

[54] **BITUMEN CONTAINER**

[75] Inventors: **Peter Lehmann**, Wadeville, South Africa; **Jacques Grisoni**, La Croix-sur-Lutry, Switzerland

[73] Assignees: **Henred-Fruehauf Trailers (Proprietary) Limited**, South Africa; **Cont-Asphalt Limited**, Seychelles, Switzerland

[21] Appl. No.: **08/822,429**

[22] Filed: **Mar. 21, 1997**

[51] **Int. Cl.**[6] **F24H 9/00**

[52] **U.S. Cl.** ..... **126/343.5** A; 126/373

[58] **Field of Search** ..... 126/343.5 A, 343.5 R, 126/369, 369.1, 350 R, 271.1, 373–376

[56] **References Cited**

U.S. PATENT DOCUMENTS

1,962,657	6/1934	Hendricks	126/343.5 A
3,503,381	3/1970	Role	126/343.5 A
3,633,563	1/1972	Osborn	126/343.5 A
4,028,527	6/1977	Thagard, Jr.	126/343.5 A

FOREIGN PATENT DOCUMENTS

2137116	7/1973	Germany	126/343.5 A
762796	12/1956	United Kingdom	126/343.5 A

Primary Examiner—James C. Yeung

Attorney, Agent, or Firm—McDonnell Boehnen Hulbert & Berghoff

[57] **ABSTRACT**

THE INVENTION provides a heatable container for bitumen, cut-back or the like, comprising a body member defining a base zone, side wall zones, end wall zone and a roof zone, characterized in means for transmitting heat from a heating medium to the base zone and to at least part of the side wall zones of the container.

6 Claims, 6 Drawing Sheets

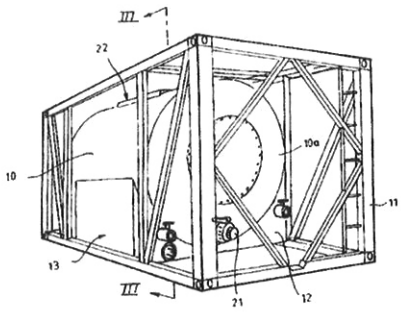

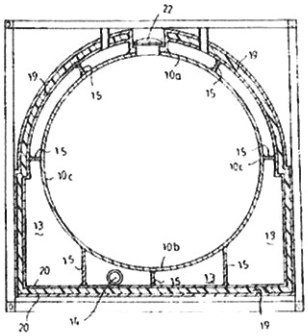

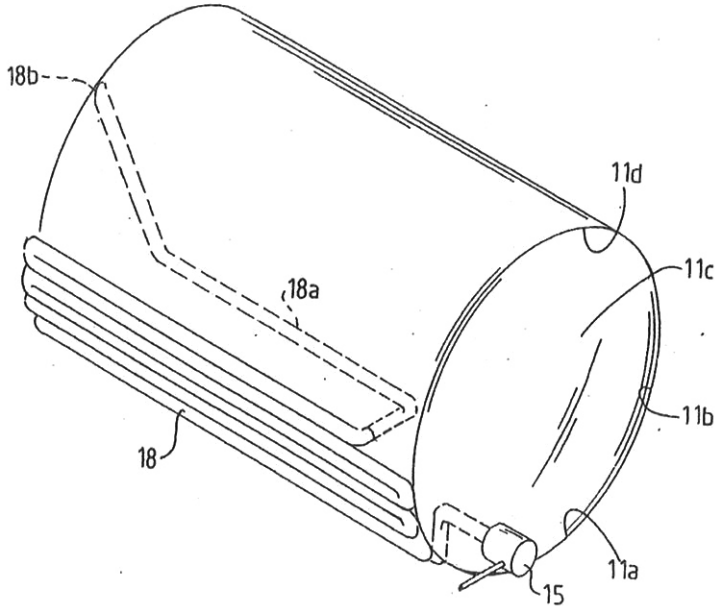

FIGURE 4

THB® THE HEATING CONTAINER WHICH ALLOWS:

RAIL

ROAD

SEA

STORAGE

OTHER USES

Improvement, simplification, reduction of investments and operatives expenses for the transport of products, hot, cold, and more particularly the bitumen.

ADVANTAGES

*It satisfied **INTERMODAL** constraints and meet all the transport conditions for road truck, railways and boats.*

It purchasing price is less expensive than a road tank allowing:

- ***the optimisation of the road truck park,***
- ***the transport from the supply source to the sites, without any break,***
- ***to provide a buffer stock on site,***
- ***to heat the product without incurring any of its properties, either organical and/or mechanical,***
- ***due to its heating system, to reduce the fuel consumption and the emission of CO2.***

CONSTRUCTION

- *Tank body, steel for boiler or paint (for food-stuff).*
- *Norms : 20 feet container ,certified by American Bureau Shipping (ABS) ISO/TC – 104, T.I.R. - C.S.C. – ASME (American Society of Mechanical Engineers /div. 1 of the part VIII – IMDG CODE*

ACCESSOIRIES

- *Lifting system for installation and removable to and form truck,*
- *Interchangeable mounting plate,*
- *Lifting network,*
- *Burner for the Heating,*
- *Transfer Pump.*

MAIN FEATURES

- *Heating system from outside of the mass of the product*
- *Heating fuel of Kerosene.*
  Consumption of 4.5 litres per ton of bitumen to raise its temperature from 30° C à 130° C.
- ***Significant reduction of CO2 emission.***
- ***Loading capacity: 18 T.***

COMMERCIAL CONDITIONS

Available on sale or rent.

Cont-Asphalt Ltd
e-mail: cal@iprolink.ch
Web: www.cont-asphalt.com

ALBES engineers s.l.
Paseo de la Castellana, 177/4º-C2
E-28046 Madrid
Tfo.: +34 915 702 246 - Fax: +34 915 718 076
E-mail : info@albes-engineers.com

Cont-Asphalt Ltd

ALBES engineers

TECNICAL DATA THB/008/UK

SAVING OF ENERGY AND REDUCTION OF CO2 PRODUCTION WITH THE THB®CONTAINER

The energy savings that can be accomplished with the containers **THB®** are very important, they are of two kinds:

- Fuel savings due to reduced heat's operations, they vary according to the procedures of transport used;
  - transport by containers from the refinery to the site,
  - transport by bulk vessel from the refinery to a port, offloading into containers and then directly delivered to the sites.

  That represents at least a 25% reduction in heating means compared to traditional conditions of use.

- Gains of transport which represent 20% higher load capacity per trip on flat trucks compared to deliveries by specialized road tanks.

FOR 18 Metric Tons OF BITUMEN	
Heating by traditional system	**Heating with THB®container**
Fuel consumption: 18 T x 18 l. = 324 l.	Fuel consumption: 18 T x 4,6 l. = 82,8 l.
	Fuel Saving : 324 – 82,8 = 241,2 litres
Production of CO2: 2,86 x 324 = 926,64 kg	Production of CO2: 2,86 x 82,8 = 236,81 kg
	CO2 Reduction : 926,64 – 236,81 = 689,83 kg

FOR 20 Metric Tons OF BITUMEN	
Heating by traditional system	**Heating with THB® container**
Fuel consumption: 20 T x 18 l. = 360 l.	Fuel consumption: 20T x 4,6 l. = 92 l.
	Fuel Saving : 360 – 92 = 268 litres
Production of CO2: 2,86 x 360 = 1'029,60 kg	Production of CO2: 2,86 x 92 = 263,12 kg
	CO2 Reduction : 1'029,60– 263,12 = 766,48 kg

FOR 22 Metric Tons OF BITUMEN	
Heating by traditional system	**Heating with THB® container**
Fuel consumption: 22 T x 18 l. = 396 l.	Fuel consumption: 22 T x 4,6 l. = 101,2 l.
	Fuel Saving : 396 – 101,2 = 294,8 litres
Production of CO2: 2,86 x 396 = 1'132,56 kg	Production of CO2: 2,86 x 101,2 = 289,4 kg
	CO2 Reduction : 1'132,56– 289,4 = 843,16 kg

ALBES ENGINEERS s.l. - Pº de la Castellana, 177 - 4º C-2. - E-28046 Madrid
Tfo: +34 915 702 246 - Fax:: +34 915 718 976 - info@albes-engineers.com – www.albes-engineers.com

CONT-ASPHALT Ltd - ALBES ENGINEERS s.l.

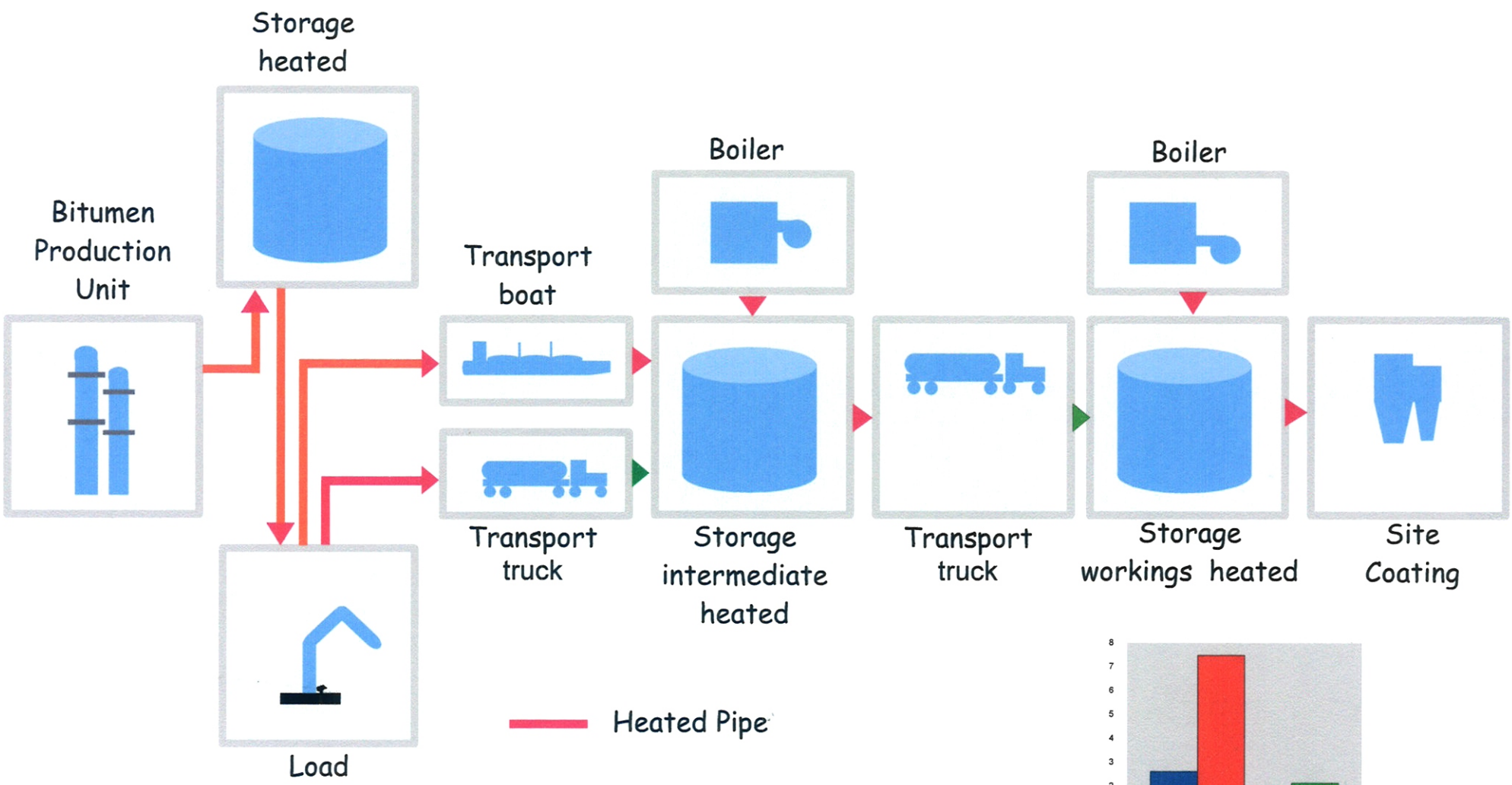

Transport of bitumen - Logistics conventional compared to the logistic THB®

With THB ® fuel oil economy and CO2 reduction = - 70%

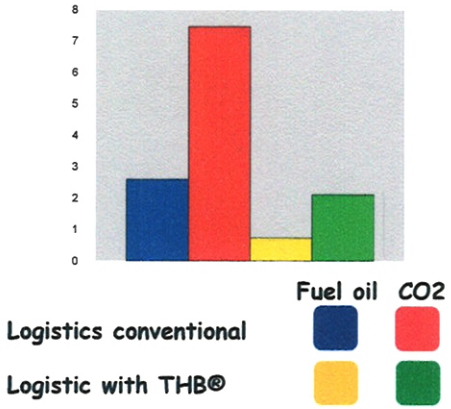

Bitumen Production Unit

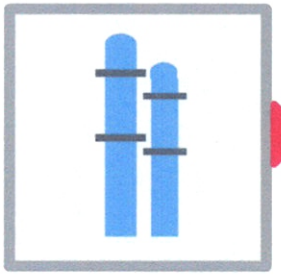

Stockage Loading

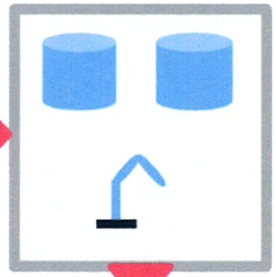

Container THB®

= Indicates heating

INTERMODAL Transport

Truck

Vessel

Train

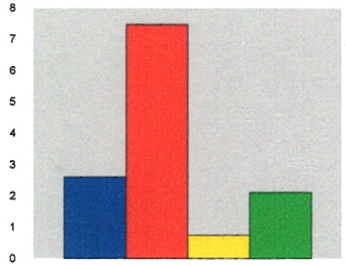

With THB® fuel oil economy and CO2 reduction = - 70%

THB® Storage
Bitumen heating

Asphalt plant

Transport of bitumen per container THB®

Simplifying transport and storage

Saving energy - Reduction of CO2 emissions

CONT-ASPHALT Ltd - ALBES ENGINEERS s.l

For decanting:
Energy consumption: 4,6 L fuel oil/metric ton
Emission CO2: 13 kg / metric ton

World Bitumen Demand (mil m tons)					
	1995	2000	2005	2010	% growth from 2000 to 2010
North America	33.92	36.85	40.95	44.22	20.0
Western Europe	21.07	21.54	22.53	23.45	8.9
Asia Pacific	17.89	20.07	23.03	26.63	32.7
Latin America	4.39	5.09	5.70	6.53	28.3
Eastern Europe	4.09	3.90	4.44	5.03	28.8
Africa/Mideast	3.89	4.36	4.86	5.44	25.0
Total Demand mil mt	85.24	91.81	101.51	111.31	21.2

United States, China and India Bitumen Demand mil mt					
	1995	2000	2005	2010	% growth from 2000 to 2010
United States	32.48	35.06	38.75	41.85	19.4
China	2.99	4.91	6.75	9.10	85.3
India	2.38	2.68	3.00	3.30	23.1

www.bitumart.com

CONT - ASPHALT Ltd

Route des Monts 410 - 1090 LA CROIX (LUTRY), Switzerland
Tel 41 21 793 14 21 **Fax** 41 21 793 14 24 **E-Mail**: cal@iprolink.ch

REFERENCES

We are listing below names of contractors having used our process regularly, for several years:
Ci-dessous, nous vous donnons une liste d'entreprises qui utilisent régulièrement, et depuis de nombreuses années, notre technologie:

FRANCE : SATOM / FOUGEROLLE / COLAS / JEAN LEFEBVRE / RAZEL / DUMEZ / DRAGAGES - SETAO (GROUPE BOUYGUES) / SPIE BATIGNOLLE / FRENCH ARMY (pour aéroports)

ITALIE : COGEFARIMPRESIT / IMPREGIGLIO / ITINERA MONDELLI-TORNO / ASTALDI / DEL FAVERO / FEDERICI

ALLEMAGNE : WAYSS-UND-FREYTAG / DYWIDAG / HEILIT-UND WOERNER / STRABAG / PHILIPP HOLZMANN

BRAZIL : ANDRADE GUTIERREZ

ANGLETERRE : MARPLES, M.J. GLEESON INTERN.

BURKINA FASO : KANAZOE

SENEGAL : CSE

YOUGOSLAVIE : PARTIZANSKI PUT

ZAIRE : M. FORREST, SAFRICAS (MAURICE DELENS)

BOTSWANA : LTA (Entreprise sud-africaine)

SEYCHELLES : LAND TRANSPORT CORPORATION (Entreprise gouvernementale)

CHINA : SHAANSI CDHC HIGHWAY GROUP

CHILE : NEXXO Engineering Company

USA : PACIFIC ASPHALT SERVICES COMPANY (GROUPE COLAS) ALASKA

Toutes ces entreprises travaillent depuis de nombreuses années dans les différents pays africains suivants:

MAURITANIE - SENEGAL - GAMBIE - GUINEE - MALI - COTE D'IVOIRE - GHANA - BURKINA FASO - NIGER - NIGERIA - TCHAD - CAMEROUN - GABON - ZAIRE - ZAMBIA - TANZANIA - KENYA - UGANDA - BOTSWANA - AFRIQUE DU SUD - SEYCHELLES - MAYOTTE - MADAGASCAR - HAITI – CHINA – CHILE - USA

The above are the countries in which the listed contractors have been active for a number of years.

CONT - ASPHALT Ltd

November 2003

ABOUT BITUMEN

In July 1990, Mr Stephen BROWN, Professor at the University of Nottingham, wrote that "Bitumen is a very widely used civil engineering material, the properties of which still remain a mystery to many of the large number of people involved in its various applications, notably in the construction and maintenance of roads. This situation arises because educational establishments generally do not provide adequate coverage in their crowded degree and other courses. Consequently, in practice, the use of bitumen remained essentially a craft rather than a technology" (1)

DEFINITION

The bitumen is defined as a "viscous liquid, or a solid, consisting essentially of hydrocarbons and their derivatives". It is a substantially non-volatile and softens when heated. It is black or brown in colour and possesses water proofing and adhesive properties. It is obtained by refinery processes form petroleum, and also found as a natural deposit or a compound of naturally occurring asphalt, in which it associated with mineral matter.

TYPES OF BITUMEN

A number of types of bitumen are available:

1. Lake asphalt:

   This is in fact the "natural asphalt". It is generally defined as TLA product, which means "Trinidad Lake Asphalt". The lake is situated in the southern part of the Island (about one km of the sea). It's one of the largest deposits in the world. The lake is approximately 35 ha, 90 m deep, and the estimated volume is about 10/15 Mios of tons.

   It is generally admitted that it has been discovered in 1595 by Sir Walter Raleigh. However, it is known that the Portuguese and possibly the Spaniards knew of the existence of the deposit before this date.

2. Rock asphalt:

   The rock asphalt is formed by the impregnation of calcareous rocks such as limestone and sandstone with seepages of natural bitumen. This product can contains up to 12 % by mass of bitumen. The principal sources of this deposit are from the Gars in France, the Val de Travers in Switzerland, and the Ragusa in Italy.

   Today, there is only minor usage of such natural asphalts in road paving or industrial application. In nearly all cases it is combined with a flux oil or soft bitumen.

(1) cf. The SHELL bitumen handbook, Foreword

3. Tar:

Tar is a generic word for the liquid obtained when natural organic materials such as coal or woods are carbonised or destructively distilled in the absence of air.

Tar is derived from manufacture of coke or smokeless solid fuel. It is generally considered synonymously as bitumen because, firstly both materials appear to be very similar, black thermoplastics having relatively high viscosities at ambient temperatures, and secondly these two materials are used for similar applications – road construction, roofing and as protective coatings for a number of industrial applications. However, they are dissimilar, not only in their origin, but also in chemical constitution. Physical and chemical differences result in differences in behaviour and gaseous/vapour emissions during application and subsequent performance in service.

Two types of crude coal tar are produced as a by-product of the carbonisation of coal:

a) *Coke oven tar*:
This material is produced at high temperatures (about 1200 °C) in coke ovens during the manufacture of metallurgical and domestic coke. These coal tars have a high aromatic hydrocarbon content and a pitch content of around 50 %.

b) *Low temperature tar*:
This material is product at comparatively low temperatures (600 °C to 700 °C) during the manufacture of smokeless solid fuel. This type of coal tar is less viscous than the high temperature coke oven tar, is paraffinic in nature and has pitch content or about 35 %.

The application is for approximately 90 % for road tars, briquetting, and electrode binders, pipe enamels.

In the road construction the use of refined tars is basically limited to Tar/bitumen mixtures for surface dressing, which are usually manufactured using more miscible low temperature tar. Refined tar is less susceptible to the effects of diesel and oil spillage than bitumen. As a result dense macadams manufactured using refined tar are often specified for vehicle parking areas.

GRADES OF BITUMEN

A number of grades of bitumen are available and they vary from solids to liquids at air temperatures:

1. Penetration Grades
They are mainly used for roads and are usually designated by penetration values. The grades range from 15 pen through to 450 pen, with corresponding softening point ranges for each grade. The grades are produced by vacuum distillation from petroleum followed in some cases by a partial oxidising process. They are used for sealing and asphalt concrete.

2. Oxidized bitumen
The oxidizes bitumen are almost entirely for industrial applications, eg roofing, mastics, pipes coatings, paints, etc. and are specified and designated by both softening point and penetration tests (eg 85/40 is an oxidized grade bitumen with a softening point of 85± 5°C and a penetration of 40±5. Oxidized bitumen also has to comply with solubility and loss on heating criteria. The softening points of oxidized grades of bitumen are much higher than those of the corresponding penetration grade bitumen and therefore the temperature susceptibility, ie penetration index is much higher, ie +2 to +8.

3. Hard grades
They have lower penetration values and higher softening points. They are more brittle and normally designated by their softening point. They also are used entirely for industrial applications, eg for roofing felts, coal briquetting, mastic, paints, etc.

4. Cutback grades
These products are produced by blending either 100 pen or 200-pen bitumen with lighter petroleum products such as kerosene, mineral turpentine or fuel oils to comply with a viscosity specification and render the bitumen more fluid for ease of handling. They are used in surface dressing, for sealing, but a significant amount is also used for the manufacture of both standard and deferred set macadams.

5. Bitumen emulsion grades
They are heterogeneous two-phase systems consisting of the immiscible liquids, bitumen and water. They are produced by dispersing penetration grades in water with emulsifying agents.

Bitumen emulsions can be divided into four classes of which the first two are by far the most important:

a) anionic emulsions
b) cationic emulsions
c) non-ionic emulsions
d) clay-stabilised emulsions

The terms anionic and cationic stem from the electrical charges surrounding the bitumen globules. This identification system originates from one of the basic laws of electricity – like charges repel, unlike charges attract. If an electrical current is passed through an emulsion containing negatively charges particles of bitumen they will migrate to the anode. Hence, the emulsion is referred to as anionic. Conversely, positively charges bitumen particles will move to the cathode and the emulsion is known as cationic. The bitumen in non-ionic emulsions is neutral and therefore they will not migrate to either pole. These are rarely used for road emulsions.

Clay-stabilised emulsions are used for industrial rather than for road applications. Here the emulsifiers are fine powders such as clays and bentonites.

Since the early fifties cationic emulsifiers have become increasingly popular because of their ability to be adsorbed onto a large variety of solid surfaces. This affinity for solid surfaces is an important property of cationic emulsions in road construction because good adhesion of bitumen to different types of mineral aggregate is essential. The cationic emulsifiers most widely used are the linear stearyl monoamines and di-amines, amidoamines and imidazolines.

Emulsion grades are used for chip seals, flush coats and tack coats.

BITUMEN QUALITY

Bitumen in common with many organic substances is affected by the presence of oxygen, ultra- violet radiation and by changes in temperatures. In bitumen these external influences it to be harden, resulting in a decrease in penetration, an increase in softening point and an increase in penetration index.

Since the yearly world consumption of bitumen is about 100 millions of tons, the quality of the bitumen is a key point. That the reason why the Oil companies have been investigating the relationship between laboratory measured properties of penetration grade bitumen and their performance in asphalt mixes for road.

With increasing traffic loadings and more demanding performance requirements the need to be able to predict long-term behaviour is essential.

Performance on the road depends on many factors, including the design, application and the quality of the individual components. Although bitumen is, in term of volume, a relatively minor component of a bituminous mix, it has a crucial role acting as a durable binder and conferring visco-elastic properties to the mix.

Essentially, satisfactory performance of bitumen on a road can be ensured if four properties are controlled:

- rheology
- cohesion
- adhesion
- durability

Durability can be defined as the ability to maintain satisfactory rheology, cohesion and adhesion in long term service.

For both tests and observation of performance in practice, key links have been identified between functional properties and the constitution of the bitumen. This work has identified that if the molecular weight distribution and chemical constitution of the bitumen is unbalanced it can exhibit inhomogeneity that may adversely affect both the cohesive and adhesive properties of the bitumen.

MANUFACTURE, STORAGE AND HANDLING BITUMEN

Manufacture of bitumen

The first process in the refining of crude oil is fractional distillation. It results lighter, which are taken off from the top of the distillation column, and the heavier fractions, which are taking off from the base of the column.

The heaviest fraction taken from the crude oil distillation process is long residue, which is a complex mixture of high molecular weight hydrocarbons, which requires further processing before it can be used as a feedstock for the manufacture of the bitumen.

The short residue is a feedstock used in the manufacture of over 20 different grades of bitumen. The viscosity of the short residue is a function of both the origin of the crude oil and the temperature and pressure in the vacuum column during processing. Depending on the origin of the crude oil the condition in the column is adjusted to produce a short residue with a penetration in the range 100 to 300 dmm. The physical properties of the short residue may further be modified by "air blowing".

This is an oxidation process, which involves the blowing of air through the short residue, either on a batch or a continuous basis, with the short residue at a temperature of 240° C to 320° C.

The penetration and softening points of the blown bitumen are affected by:

- the viscosity of the feedstock
- the temperature in the blowing column
- the residence time in the blowing column
- the origin or the crude oil used to manufacture the feedstock
- the air-to-feed ratio

Storage and handling temperatures of bitumen

When handled properly, bitumen can be reheated or maintained at elevated temperature for a considerable time, without adversely affecting their properties.

However, maltreatment of bitumen by overheating or by using conditions, which promote oxidation, can adversely affect bitumen, properties and could influence long-term performance of material made with it. The degree of hardening (or, under certain circumstances, softening) produced as a result of mishandling is function of a number of parameters such as temperature, the presence of air, the surface-to-volume ratio of the bitumen, method of heating and the duration of exposure to these conditions.

Bitumen should always be stored and handled at the lowest temperature possible, consistent with efficient use. For normal operation, ie the blending and transferring of liquid bitumen, temperature of 10° C to 50° C above the minimum pumping temperature are recommended, but to minimize the risk of autoignition of the bitumen 230° C should never be exceeded.

Reheating of bitumen in tanks:

When bitumen is being reheated in bulk storage, care must be taken to heat the bitumen intermittently over an extended period to prevent localized overheating of the product around the heating pipes or coils. This is particularly important when direct flame tube is used because the surface temperatures in excess of 300° C can be reached. In such instances initially only a limited amount of heat should be applied, sufficient to raise the temperature of the product to just above its softening point. This will allow the material to soften and then the heat can be reapplied to bring the temperature of the product to the requires working temperature. This technique is beneficial because when the bitumen is a fluid, albeit a viscous fluid, convection currents are more able to dissipate the heat throughout the bulk and therefore localized overheating is less of a problem. Circulation of the tank contents should begin as soon as the product is sufficiently fluid, thereby further reducing the likelihood of local overheating. If prolonged direct flame heating is used, cracking of the bitumen may result.

MECHANICAL TESTING AND PROPERTIES OF BITUMEN

Bitumen is a complex material with a complex response to stress. A wide range of tests is performed on bitumen, from specification tests to more fundamental rheological and mechanical tests.

The response of a bitumen to stress is dependent on both temperature and loading time. Thus, the nature of the test and what it indicates about the properties of a bitumen must be interpreted in relation to the nature of the material.

The two tests used in general are the penetration and the softening point tests. As these tests are empirically derived it is important that they are always carried out under exactly the same conditions. These conditions are published by the Institute of Petroleum (**IP**), the American Society for Testing and Materials (**ASTM**) and British Standards (**BS**). Those institutions are publishing standard methods of testing bitumen. In many case the methods are identical and therefore methods are published jointly. However, some methods differ in detail, for example the IP and ASTM softening point method, and in these cases a correction factor is provided to relate test results obtained using two test methods. We have today the EUROPEAN NORMS (**EN**).

1. Penetration test:

   The consistency of a penetration or oxidized bitumen is measured by the penetration test. In this test a needle of specified dimensions is allowed to penetrate into a sample of bitumen, under a know load (100 g) at a fixed temperature (25° C), for a known time (5 seconds). The distance the needle penetrates, in unit of decimillimetre, dmm (0.1 mm), is termed the penetration. Therefore, the greater the penetration of the needle the softer the bitumen. This test is the basis upon which penetration grade bitumen are classified into standard penetration grades.

2. Softening test:

   The consistency of a penetration or oxidized bitumen can also be measured by determining its softening point. In this test a steel ball (3.5 g) is placed on a sample of bitumen contained in a brass ring; this is suspended in a water or glycerol bath. Water is used for bitumen with a softening point of 80° C or below, and glycerol is used for softening points greater than 80° C. The bath temperature is raised at 5° C per minute, the bitumen softens and eventually deforms slowly with the ball through the ring. At the moment the bitumen and steel ball touch a base plate 25 mm below the ring, the temperature of the water is recorded. The test is performed in duplicate and the mean of the two measured temperatures is reported, to the nearest 0.2° C for a penetration grade bitumen and 0.5° C for an oxidized bitumen. If the difference between the two results exceeds 1.0° C the test must be repeated. The reported temperature is designated the softening point of the bitumen, and represents an equi-viscous temperature. In the ASTM version of the softening point test the bath is not stirred, whereas in the IP version the water or glycerol is stirred; consequently the softening points determined by using these two methods differ. The ASTM results are generally 1.5° C higher than for the IP or BS method.

In addition to the penetration and softening point, limits are given for solubility in trichlorethylene and loss on heating. The loss on heating test ensures that there are no volatile components in the bitumen that could result in excessive hardening during storage, application or in service. The solubility content limits ensure that contaminants such as carbon (coke) and mineral matter are kept to negligible proportions.

In addition to these basic tests some countries have specifications, which include other tests such as viscosity, ductility, etc.

DURABILITY OF BITUMEN

Bitumen is common with any organic substances is affected by the presence of oxygen, ultra-violet radiation and by changes in temperature. In bitumen these external influences cause it to harden, resulting in a decrease in penetration, an increase in softening point and an increase in penetration index (PI). Four principal mechanism of bitumen hardening have been identified:

1. Oxidation:

   Bitumen slowly oxygenized when in contact with air. The consequence of oxidation is a modification of the higher molecular weight and thereby increase the viscosity of the bitumen. Some hydroxyl, carbonyl and carboxylic groups are formed resulting in larger and more complex molecules, which make the bitumen harder and less flexible.

   The degree of oxidation is highly dependent of the temperature. Hardening due to oxidation has long been held to be the main cause of ageing, to the extend that other factors have hardly been considered. However, it has been shown that although other factors are generally less important than oxidation they are certainly measurable.

2. Loss of volatile:

   Evaporation of volatile components depends mainly upon temperature and the condition of exposure. Penetration grades bitumen are relatively involatile and therefore the amount of hardening resulting from loss of volatiles is usually fairly small.

3. Physical hardening:

   Is occurs when the bitumen is at ambient temperature and is usually attributed to reorientation of bitumen molecules and the slow crystallization of waxes. Physical hardening is reversible in that upon reheating the original viscosity of the bitumen is obtained.

4. Exudative hardening:

   It results from the movement of an oily component, which exudes from the bitumen into the mineral aggregate. It is a function of both the exudation tendency of the bitumen and the porosity of the aggregate.

THE INFLUENCE OF BITUMEN PROPOERTIES ON PERFORMANCE IN PRACTICE

As we have seen all along this document, the performance of bitumen-bound mixes in practice is significantly influenced by the rheological (or mechanical) properties and to a lesser extent the chemical constitution of the bitumen. The latter is particularly important at the road surface because the constitution of the bitumen influences the rate of oxidation and thereby how rapidly the bitumen is eroded by traffic.

These factors are, in turn, influenced by changes due to the effect of air, temperature and water on the bitumen. They are, of course, many other factors influencing behavior, including the nature of aggregate, mix composition, bitumen content (ie bitumen film thickness), degree of compaction, etc, all of which influence long term durability.

NEW HEATING CONCEPT AND TRANSPORT NETWORK FOR BITUMEN

Considering the temperature as a key point influencing the properties of the bitumen, especially regarding the heat of the bitumen, CONT-ASPHALT Ltd had developed, taking into consideration all the laboratory tests as well as the results of the applications on the road construction, a new heating concept for the bitumen.

We have patented a new heatable container system for the transport and the heating of the bitumen on site. Since 15 years, we already have delivered, in all Africa, Caribbean, around 800'000 tons of bitumen and we are starting to operate in Middle East, Asia, among others in India. We are introducing our concept into China, and we are starting in South America.

Taking into consideration the fact that the bitumen is a bad heat transmitter product, and in opposition to all the other systems available into the market (as the thermic oil system, the electrical resistance system installed into containers, the one or two needles system placed in the bottom of the containers or the tank containers), which all are heating the bitumen **we are heating the bitumen outside of the mass of the product, avoiding any thermic shock to the product**. The consequences of the thermic shock is the formation of micro fissures, thus the formation of the stiffness of the premix, the formation of ruts, grooves.

OWING TO OUR SYSTEM, BITUMEN DOES NOT INCUR ANY CHANGE OF STANDARD, BOTH MECHANICAL, AS WELL AS ORGANICAL PROPERTIES.

Due to the very large exchange calories' surface, we raise the product temperature up regularly and in a relatively short period of time. We are heating 18 tons of bitumen within 8 hours, and the consumption of fuel, or kerosene is about 4,5 liters per ton. Using, **in a double bottom**, a hot airflow originating **from two removable burners**, running on fuel oil, or on kerosene, we have a **very good balance of heat, and this on the complete surface of the double bottom**.

For more technical information, please visit our Web Page on the following addresses:

www.cont-asphalt.com

Or by e-mail at : cal@iprolink.ch

Our phone number : + 41 21 793 14 21
Our fax number : + 41 21 793 14 24

For courier and commercial address: CONT-ASPHALT Ltd
Route des Monts 410
1090 La Croix
(Switzerland)

The person to contact : Dr J. Grisoni
CEO

The advantages of renting

For contractors seeking a competitive advantage there are clear advantages in renting equipment rather than buying, reports *Peter Anderson* and *Alan Peterson*

In the past contractors often overlooked the advantages of renting equipment instead of buying outright. But to many it seems odd to spend money on equipment that is seldom used and can sit idle for weeks or even months at a time. However, not all machines are suitable for rental, particularly in the road building sector. Mid-size compactors and small pavers are entering this sector, but bigger pavers are still a strategic acquisition for many contractors.

When the cost of rental is compared to owned equipment on an actual hours-worked basis, the difference can be quite an eye-opener. While it can be difficult to gauge the true cost of operating and maintaining owned equipment, the cost of a rented machine is clear.

A typical road contract. Much of the equipment seen is rented

> **"80% of the 18,000 rental operations in the United States and Canada rent at least some contractor equipment"**

According to leading US rental expert Dan Kaplan, the rental business is a negative cash flow business in good times and a positive cash flow business in bad times. Growing a business requires buying more fleet, which uses capital and depletes cash. Conversely, when times are hard, companies reduce the purchase of equipment and immediately cash flow turns positive.

As renting continues to gain in popularity, contractors are starting to analyse the true costs of equipment ownership. Renting is kind to the balance sheet, since rental equipment is not recorded as a liability. This can give companies a more favourable assets-to-liabilities ratio and borrowing power. Then there is downtime. Even well maintained equipment breaks down occasionally. The costs of downtime are minimised or eliminated when the equipment is rented, since most rental companies will deliver replacement machines quickly, and at no charge.

The choice to rent depends on the length of time or the number of times the equipment is needed. Today, many contractors figure equipment rental into their overall business planning process.

The American Rental Association estimates that approximately 80% of the 18,000 rental operations in the United States and Canada rent at least some contractor equipment.

Traditionally, construction companies in Europe have preferred to own their equipment. The UK has moved steadily towards rental with the majority of new machines sold now going to plant hire companies. Although continental European contractors have remained more faithful to an outright purchase strategy in the past this has changed with a significant increase in the numbers of new kit produced being supplied to hire companies especially in major countries such as France and Germany as well as, but to a lesser extent, Italy and Spain. There is certainly a strong case for renting as it is easy to forget some of the many other costs associated with purchased equipment. There are tangible overhead costs in respect of purchase that include insurance, interest due on borrowed finance, transportation, parts and labour for any maintenance requirements.

Other aspects in favour of renting are that they allow the contractor to concentrate on his company's core business as well as providing the flexibility to choose the right machine, and very likely, the most up to-date. Interestingly, some firms now offer more expensive equipment on a rental basis.

Some of the advantages of renting are:

- **Maintenance costs**. The rental contract generally covers full maintenance of equipment. There is no need for a repair shop, no spare parts or repair tools, no mechanic, no maintenance records.
- **Down time**. When rented equipment breaks down, the rental centre replaces it fast.
- **Storage**. Return idle equipment to the rental center rather than using space to store it.
- **Hidden costs**. Cost control is easy with rentals. When equipment is returned undamaged, the amount shown on the rental invoice is the only accountable cost figure to pay.
- **Old equipment**. Rental centres update inventory each year, providing state-of-the-art equipment for their customers ■

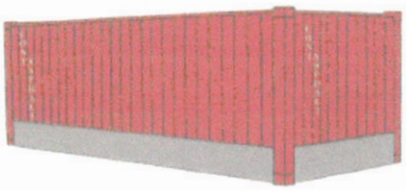

CONT - ASPHALT Ltd

ASSUMPTIONS FOR THE THB® LEASING COMPANY IN USA

1. The forecast is covering a period of 5 year

2. The purchaising price by the new Company is $ 19'750,00 per unit, FOB Shanghai

3. The estimated freight cost China – USA West Cost is $ 2'150,00 per unit.

4. The capacity of a THB® is 20 m³ (of bitumen at 68° F) representing 19 tons of hot bitumen.

5. The American market is 40 mios of tons per year. Our objective of market shares has been calculated as follow: Each THB®, laoded at 19 Tons, over 10 months, 2 rotations per mont

Year	Nr. THB®	Total THB®	Volume Tons	Cumul Volume	Market Share	Cumul
1	1'600		608'000		1.5 %	
2 new	2'000	3'600	760'000	1'368'000	1.9%	3.4%
3 "	3'000	6'600	1'140'000	2'508'000	2.8%	6.2%
4 "	3'600	10'200	1'368'000	3'876'000	3.4%	9.6%
5 "	4'000	14'200	1'520'000	5'396'000	3.8%	13.4%

6. The rental rate, 30 $ per day and per THB® should be considered as a "conservative one".

   This rate of 30 $ is the rate applied in India and we have to check what the American market is able to accept a better rate. During the study at the World 2006 of Asphalt Exhibition, we didn't look at that point as we only were proposing the sale of the containers to customers, and that for an "investement point of view. We could assume that in USA, we probably could have a rate which could be around 35 to 40 $ per day and per container, as the sales price we indicated during the Exhibition was $ 28'800, FOB Shanghai. That price was well considered by potential customers.

   We have made 2 additional simulations with rental rate at $ 35 and 40 per day and per THB®.

7. The initial equity of the company has been estimated at equivalent to the 1st year investment in THB®, which is 18 Mios $, plus a working capital of US$ 2 Mios.

8. The amortization is linear over 5 years (see attach.)

9. The interest rate, for the first year have been taken on the half of the investment, as we assume that the equity will cover the half of the investment and the working capital (18 Mios + 2 Mios). From year 2, we have considered to get long term loans covering the new investment of THB®.
   We have taken an interest of 8% on the loans.

10. The THB® will be stored, as per our experience, at transporters ground. We should look for the agreement in vairoius areas, for example 1 area per State ?

11. The maintenance of the THB® has been considered, based on historical experience, at 2 days/THB®. We have to draw the attention that in the Leasing contract, we are requesting from the contractors to put the THB® in his insurance third party for an amount of $ 25'000 per THB®. The THB® should be returned after the leasing period on the same state that he was at the beginning of the lease.

12. The burners, supplied with the THB®, will be put at the disposal of the customer at the beginning of the rent. All additional burners will be on customers' charges

13. A sales force, composed by 3 salesmen for the 1st year has been considered at a monthly salary of $ 4'500.00. Every year, we have foreseen an additional salesmen at the same salary. We consider That one technician can visit the potential customers for a 300 THB®. This person should know the the road business, and he will be trained by ourself for the understanding of our technology.

14. The Patent Fee has been calculated at 2 $ per day of rental/per THB® over 300 days

15. The Travel expenses have been calculated at 1000 $ per month and per salesmen.

16. The Administrative Overheads, we have considered a percentage of 6% on the sales.

17 A technician will be working at the beginning of the activity. At the beginning of the works, he will school the customers' staffs, in order that they can use the THB® technology in a proper way taking full advantage of the system. We considered a salary of $ 3500 per month, plus some travel expenses of 1000 $ per month.

NORTH AMERICAN LEASING DISTRIBUTION COMPANY

THB

01/05/2008

FORECAST OVER 5 YEARS

ASSUMPTIONS

			Year 1	Year 2	Year 3	Year 4	Year 5	CUMUL
1	PURCHAISING PRICE PER THB UNIT	$	19750					
2	FREIGHT CHINA - USA		2150					
3	COST OF THE THB® IN USA		21900					
4	NUMBER OF NEW THB PER YEAR		1600	2000	3000	3600	4000	
5	TOTAL THB IN CIRCULATION		1600	3600	6600	10200	14200	14200
6	YEARLY INVESTMENT		35040000	43800000	65700000	78840000	87600000	310980000
5	AMORTIZATION OVER 5 YEARS (LINEAR)		7008000	15768000	28908000	44676000	62196000	158556000
6	DURATION OF THE ANNUAL LOCATION		10 MONTHS / YEARS PER CONTRACT (300 days)					
7	RENTAL RATE PER HTB PER DAY	$	30					
8	ACCESSORIES (accord. to historical experience)	$/D/THB	0.31	FF 2300/BURNER /7=328 $/UNIT				
9	**TURNOVER**	$,000	14400000	32400000	59400000	91800000	127800000	325800000
10	ACCESSORIES 2 BURNERS/FOR HALF NUMBER OF THB		262400	590400	1082400	1672800	2328800	5936800
11	**TOTALEXPENSES**		262400	590400	1082400	1672800	2328800	5936800
12		% of Turnover	0.02	0.02	0.02	0.02	0.02	0.02
13	**Gross Margin**		**14137600**	**31809600**	**58317600**	**90127200**	**125471200**	**319863200**
14		% of Turnover	**0.98**	**0.98**	**0.98**	**0.98**	**0.98**	**0.98**
15	ADMINISTRATIVE OVERHEADS	6 % s/ Turnover	864000	1944000	3564000	5508000	7668000	19548000
17	SALES FORCE	0,50c/$/DAY/THB®	240000	540000	990000	1530000	2130000	5430000
18	PATENT FEE	2$J/THB®	960000	2160000	3960000	6120000	8520000	21720000
19	FINANCIAL EXPENSES	8% s/ Investment	2803200	3504000	5256000	6307200	7008000	24878400
20	**Total Overheads**		**4867200**	**8148000**	**13770000**	**19465200**	**25326000**	**71576400**
		% of Turnover	33.8	25.1	23.2	21.2	19.8	22.0
21	AMORTIZATION		7008000	15768000	28908000	44676000	62196000	158556000
22	**PROFIT BEFORE TAX**		**2262400**	**7893600**	**15639600**	**25986000**	**37949200**	**89730800**
23		% of Turnover	**15.7**	**24.4**	**26.3**	**28.3**	**29.7**	**27.5**
24	Tax 30%		678720	2368080	4691880	7795800	11384760	26919240
25	**PROFIT AFTER TAX**		**1583680**	**5525520**	**10947720**	**18190200**	**26564440**	**62811560**
		ROI %	4.5	12.6	16.7	23.1	30.3	20.2

AMORTIZATION NORTH AMERICA THB® LEASING COMPANY

1.5.08

CHART OF AMORTIZATION FOR THE THB INVESTMENT AS PER 5 YEARS PLAN

										US $		
Years	New THB	Investment	Year 1	Year 2	Year 3	Year 4	Year 5	Year 6	Year 7	Year 8	Year 9	TOTAL
1	1600	35040000	7008000	7008000	7008000	7008000	7008000	-	-	-	-	35040000
2	2000	43800000	-	8760000	8760000	8760000	8760000	8760000	-	-	-	43800000
3	3000	65700000	-	-	13140000	13140000	13140000	13140000	13140000	-	-	65700000
4	3600	78840000	-	-	-	15768000	15768000	15768000	15768000	15768000	-	78840000
5	4000	87600000	-	-	-	-	17520000	17520000	17520000	17520000	17520000	87600000
TOTAL		310980000	7008000	15768000	28908000	44676000	62196000	55188000	46428000	33288000	17520000	310980000

Investment US $ 19750 + 2150/unit (Transp. China-USA) = US$ 21900/UNIT